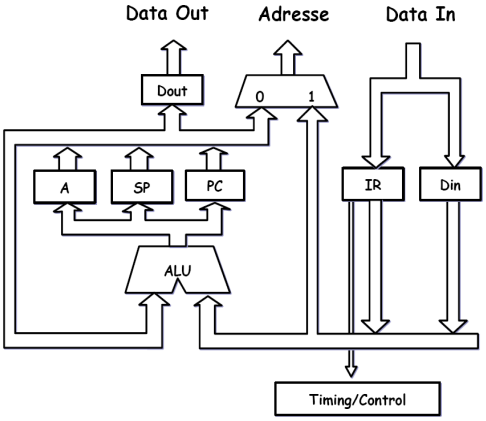

Inputs						Outputs																
Instruction	Opcode	Reset	step	ACCz	ACCi5	step	Adress	Ace	Aoe	PCce	PCoe	IRce	IRoe	SP ce	SPoe	DINce	DINoe	DOUTce	DOUToe	ALU Function	MEMrq	RnW	