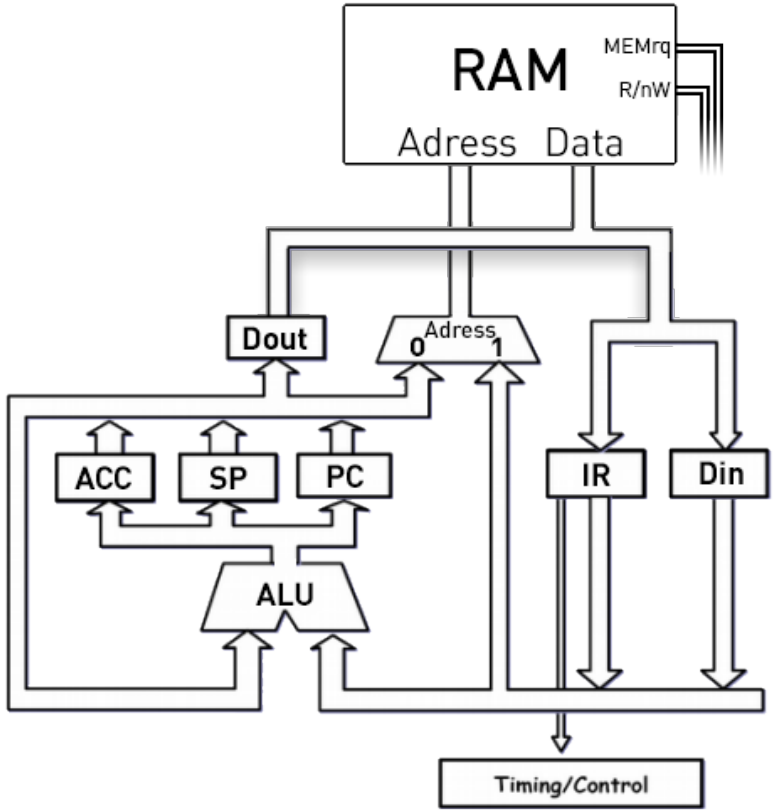

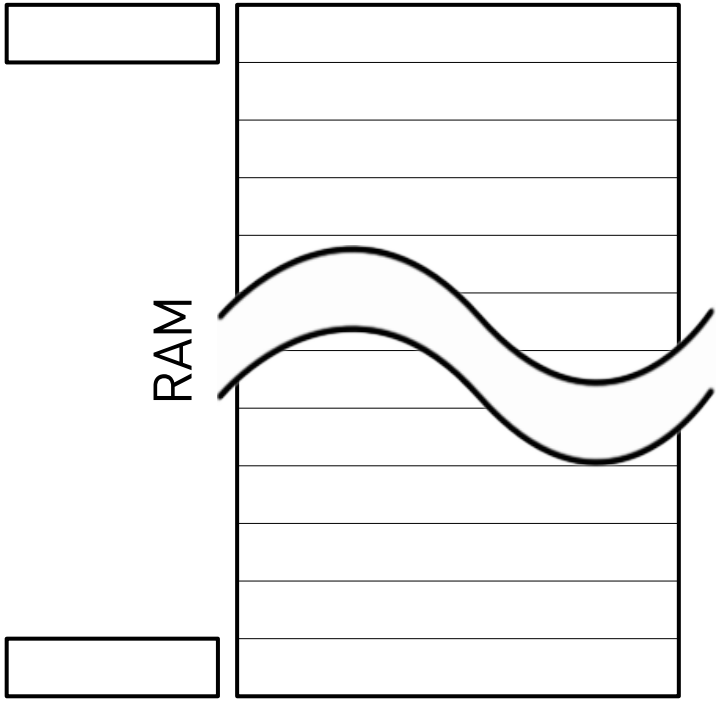

Inputs						Outputs																														Description / Effect
																														Memory						
Instruction	Opcode	$\overline{\text{Reset}}$	Step	ACCz / Zero	ACC15 / Neg	Step	ACC		SP		PC		IR		DIN		DOUT		ALU	Adress	MEMrq	R/nW	$S = IR_{0...11}$
							oe	ie	oe	ie	oe	ie	oe	ie	oe	ie	oe	ie					

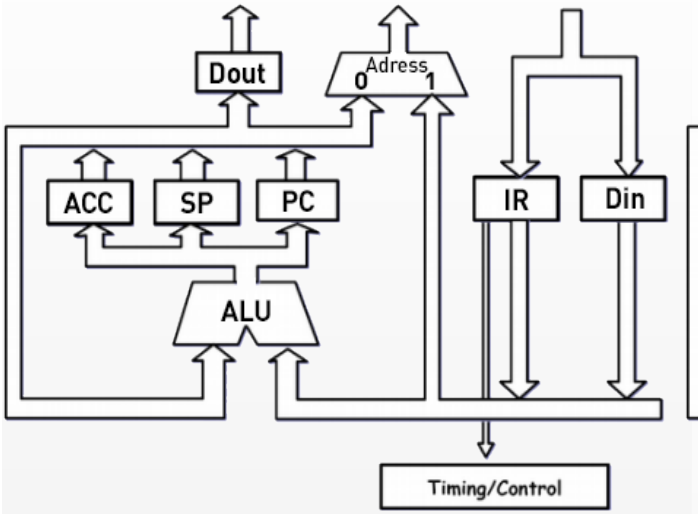

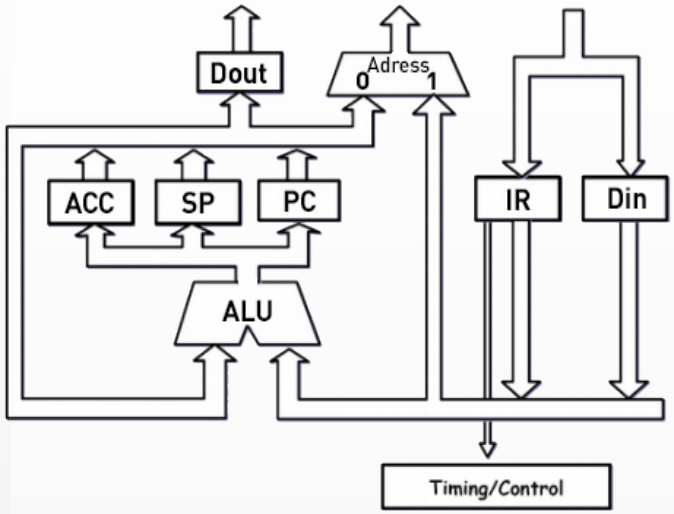

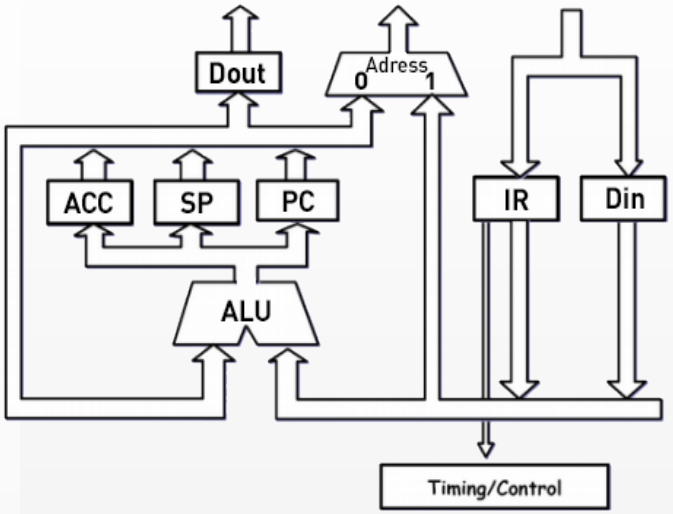

Inputs						Outputs																	Description / Effect
																				Memory			
Instruction	Opcode	$\overline{\text{Reset}}$	Step	ACCz / Zero	ACC15 / Neg	Step	ACC		SP		PC		IR		DIN		DOUT		ALU	Adress	MEMrq	R/nW	$S = IR_{0...11}$
							oe	ie	oe	ie	oe	ie	oe	ie	oe	ie	oe	ie					
		1	0	x	x	1	0	0	0	0	1	1	0	1	0	0	0	0	A+1	0	1	1	IR=[PC], PC = PC + 1

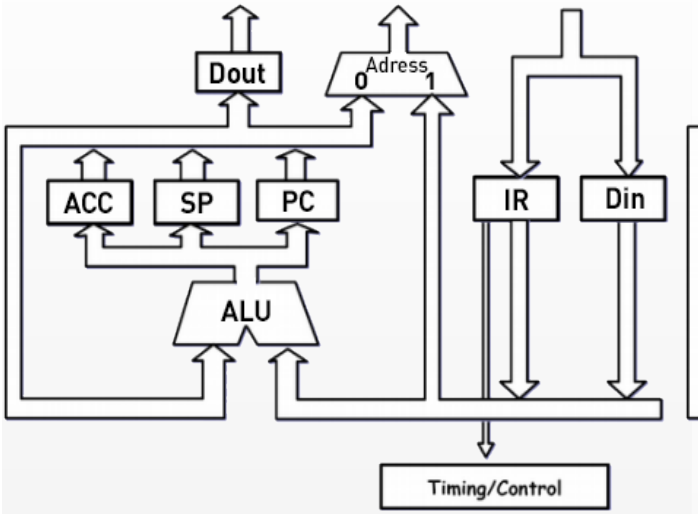

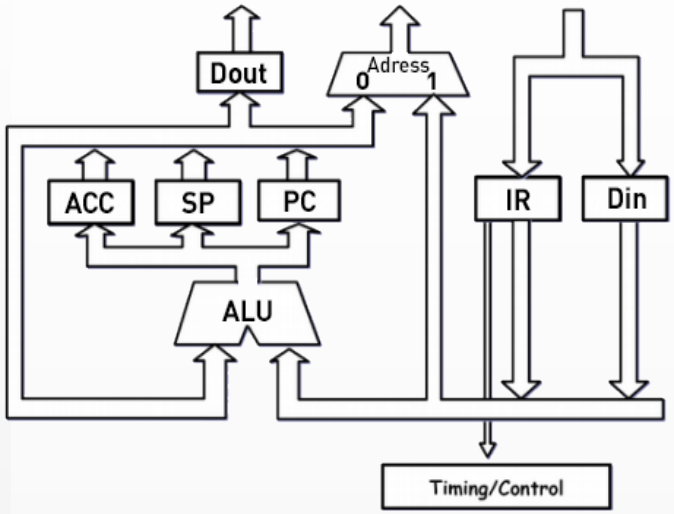

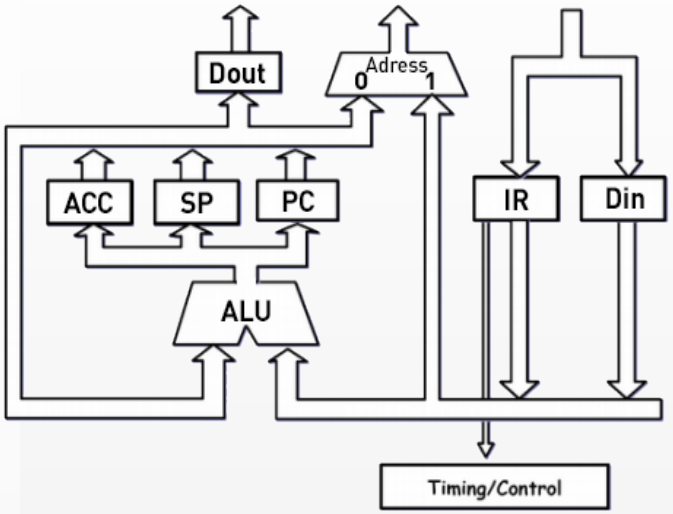

Inputs						Outputs																	Description / Effect
																				Memory			
Instruction	Opcode	$\overline{\text{Reset}}$	Step	ACCz / Zero	ACC15 / Neg	Step	ACC		SP		PC		IR		DIN		DOUT		ALU	Adress	MEMrq	R/nW	$S = IR_{0...11}$
							oe	ie	oe	ie	oe	ie	oe	ie	oe	ie	oe	ie					
		1	0	x	x	1	0	0	0	0	1	1	0	1	0	0	0	0	A+1	0	1	1	IR=[PC], PC = PC + 1

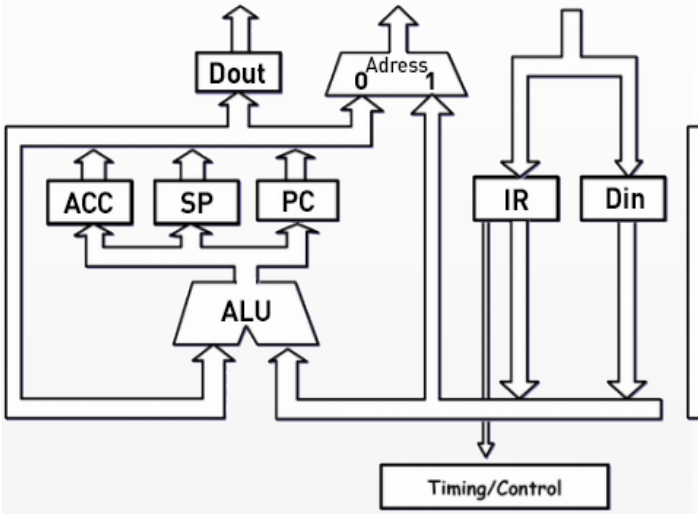

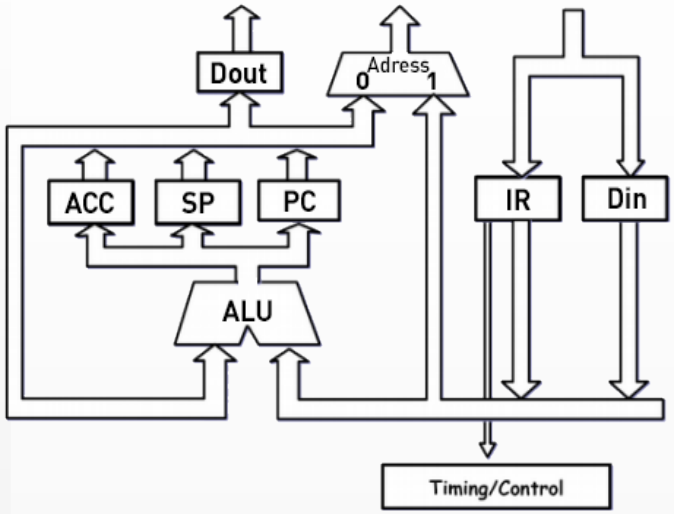

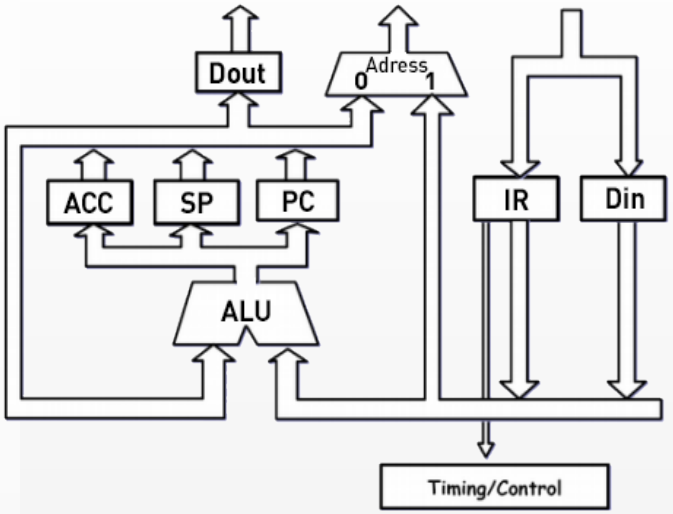

Inputs						Outputs																	Description / Effect
																				Memory			
Instruction	Opcode	$\overline{\text{Reset}}$	Step	ACCz / Zero	ACC15 / Neg	Step	ACC		SP		PC		IR		DIN		DOUT		ALU	Adress	MEMrq	R/nW	$S = IR_{0...11}$
							oe	ie	oe	ie	oe	ie	oe	ie	oe	ie	oe	ie					
		1	0	x	x	1	0	0	0	0	1	1	0	1	0	0	0	0	A+1	0	1	1	IR=[PC], PC = PC + 1

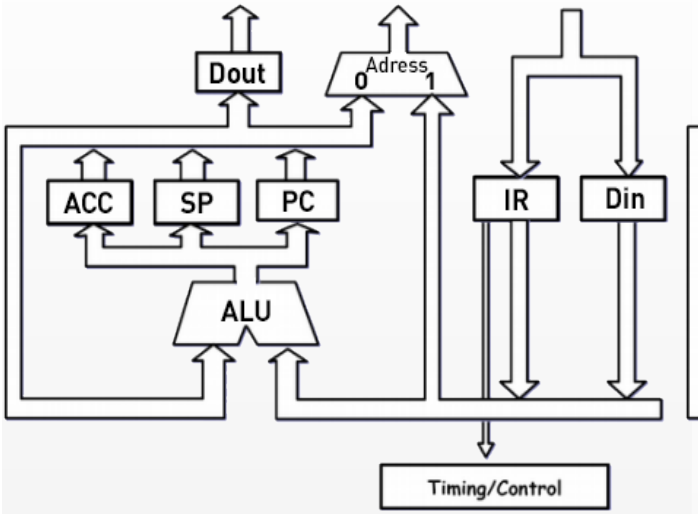

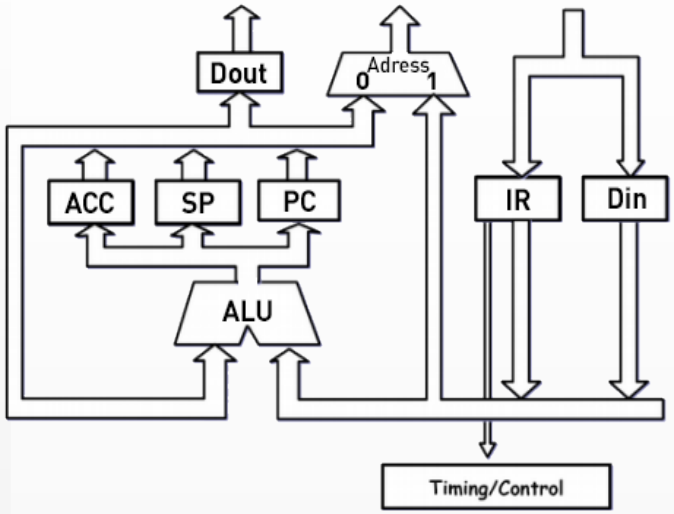

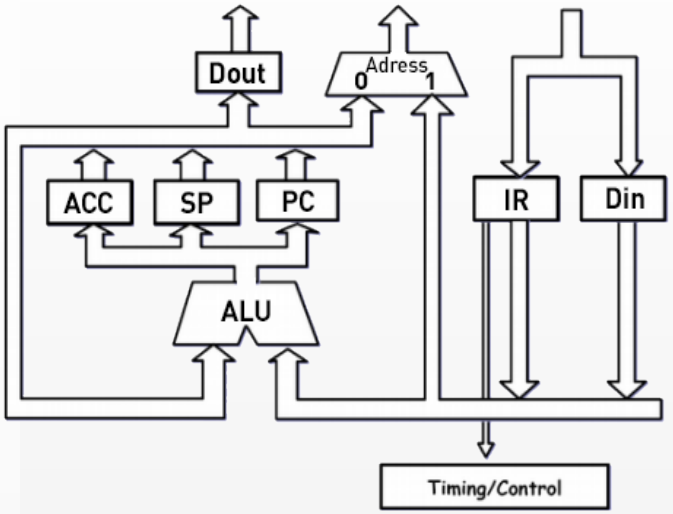

Inputs						Outputs																	Description / Effect
																				Memory			
Instruction	Opcode	$\overline{\text{Reset}}$	Step	ACCz / Zero	ACC15 / Neg	Step	ACC		SP		PC		IR		DIN		DOUT		ALU	Adress	MEMrq	R/nW	$S = IR_{0...11}$
							oe	ie	oe	ie	oe	ie	oe	ie	oe	ie	oe	ie					
		1	0	x	x	1	0	0	0	0	1	1	0	1	0	0	0	0	A+1	0	1	1	IR=[PC], PC = PC + 1

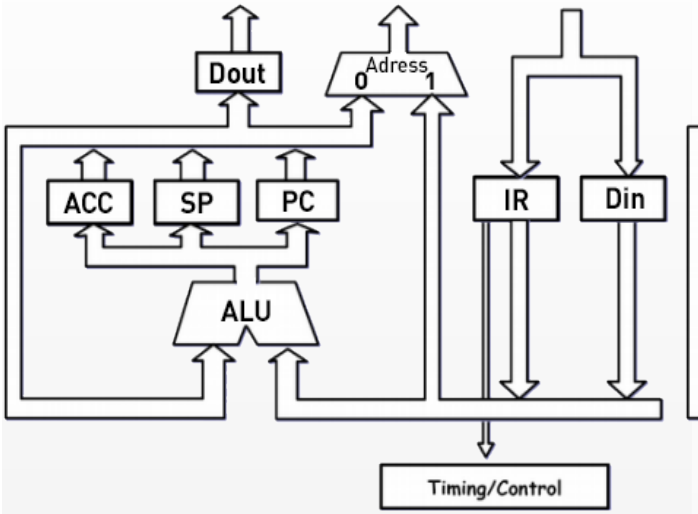

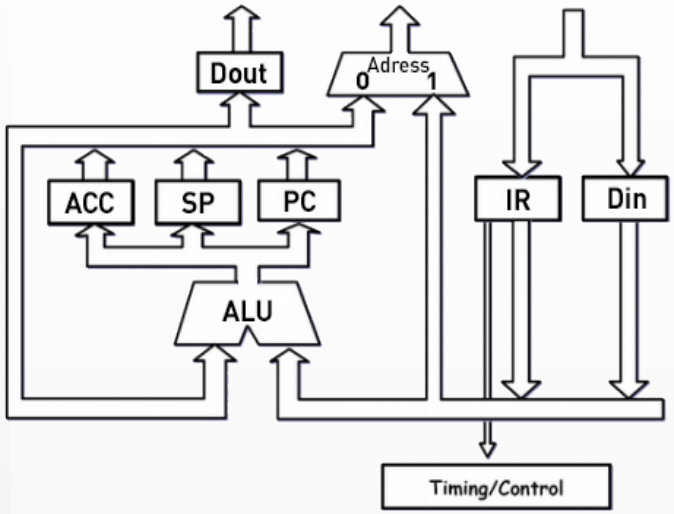

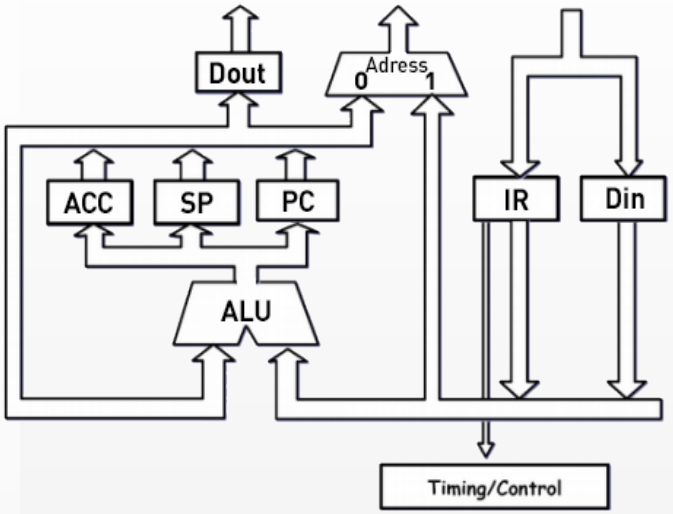

Inputs						Outputs																	Description / Effect
																				Memory			
Instruction	Opcode	$\overline{\text{Reset}}$	Step	ACCz / Zero	ACC15 / Neg	Step	ACC		SP		PC		IR		DIN		DOUT		ALU	Adress	MEMrq	R/nW	$S = IR_{0...11}$
							oe	ie	oe	ie	oe	ie	oe	ie	oe	ie	oe	ie					
		1	0	x	x	1	0	0	0	0	1	1	0	1	0	0	0	0	A+1	0	1	1	IR=[PC], PC = PC + 1

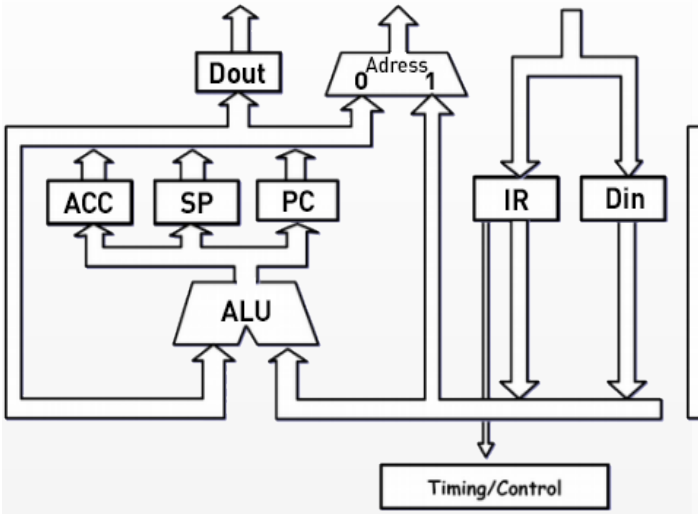

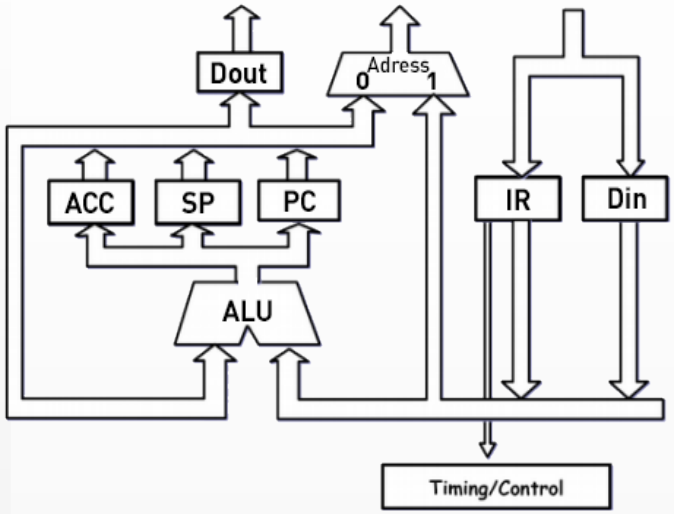

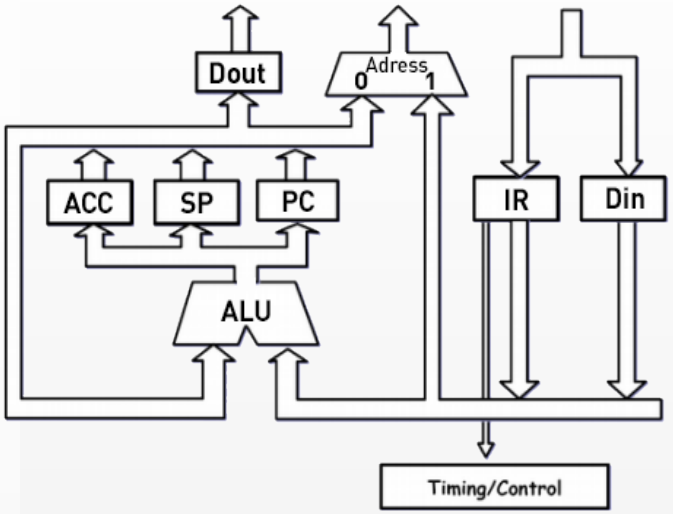

Inputs						Outputs																	Description / Effect
																				Memory			
Instruction	Opcode	$\overline{\text{Reset}}$	Step	ACCz / Zero	ACC15 / Neg	Step	ACC		SP		PC		IR		DIN		DOUT		ALU	Adress	MEMrq	R/nW	$S = IR_{0...11}$
							oe	ie	oe	ie	oe	ie	oe	ie	oe	ie	oe	ie					
		1	0	x	x	1	0	0	0	0	1	1	0	1	0	0	0	0	A+1	0	1	1	IR=[PC], PC = PC + 1

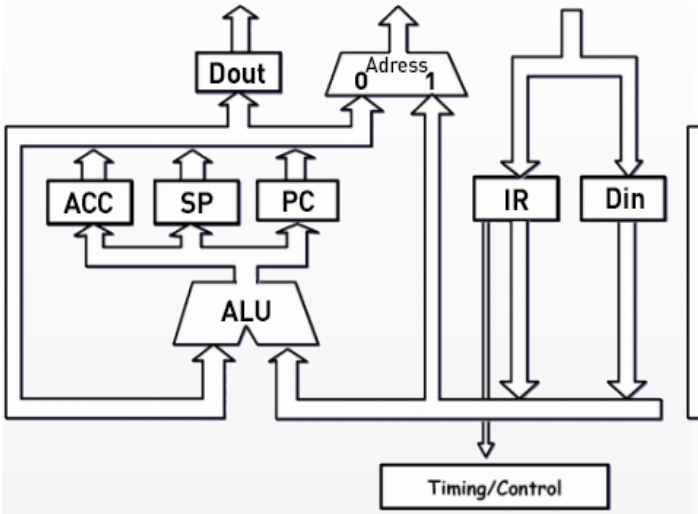

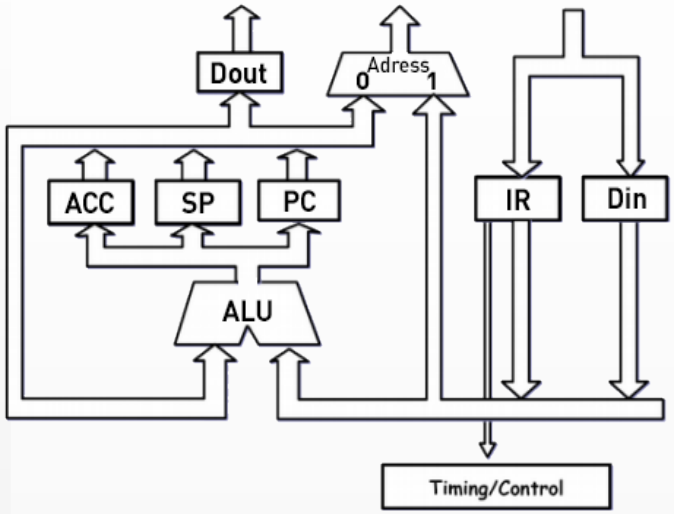

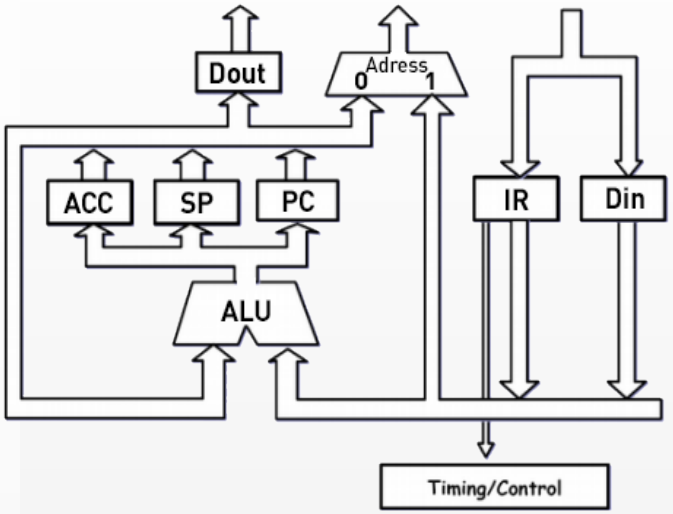

Inputs						Outputs																	Description / Effect
																				Memory			
Instruction	Opcode	$\overline{\text{Reset}}$	Step	ACCz / Zero	ACC15 / Neg	Step	ACC		SP		PC		IR		DIN		DOUT		ALU	Adress	MEMrq	R/nW	$S = IR_{0...11}$
							oe	ie	oe	ie	oe	ie	oe	ie	oe	ie	oe	ie					
		1	0	x	x	1	0	0	0	0	1	1	0	1	0	0	0	0	A+1	0	1	1	IR=[PC], PC = PC + 1

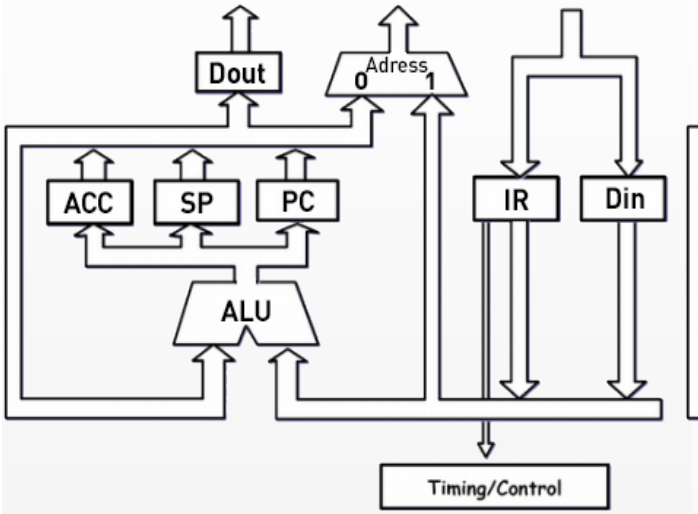

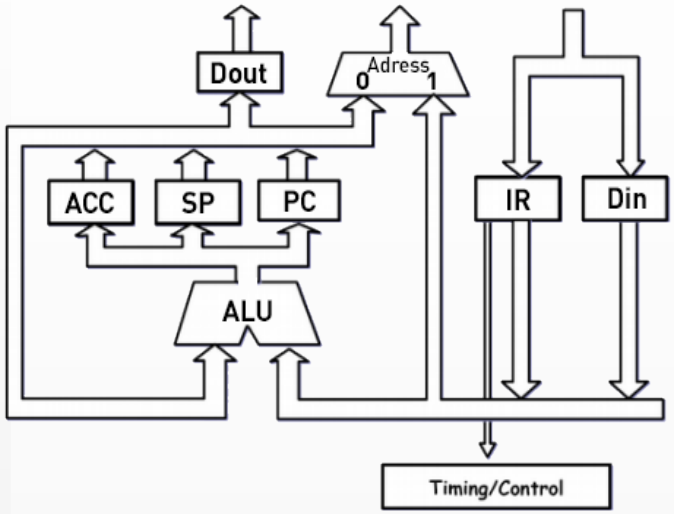

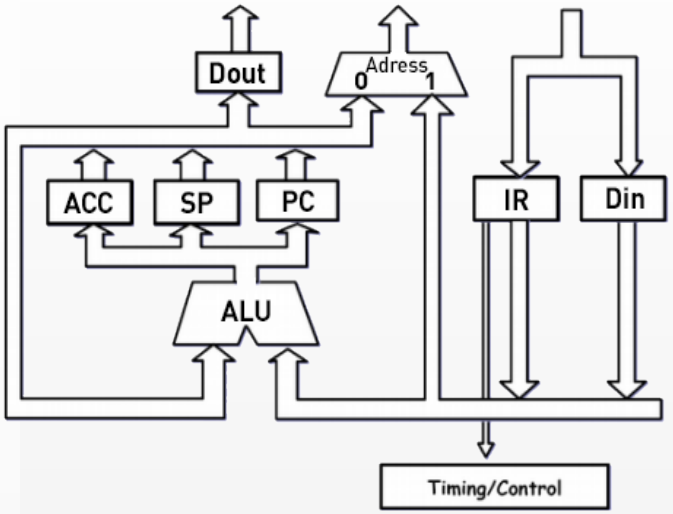

Inputs						Outputs																	Description / Effect
																				Memory			
Instruction	Opcode	$\overline{\text{Reset}}$	Step	ACCz / Zero	ACC15 / Neg	Step	ACC		SP		PC		IR		DIN		DOUT		ALU	Adress	MEMrq	R/nW	$S = IR_{0...11}$
							oe	ie	oe	ie	oe	ie	oe	ie	oe	ie	oe	ie					
		1	0	x	x	1	0	0	0	0	1	1	0	1	0	0	0	0	A+1	0	1	1	IR=[PC], PC = PC + 1

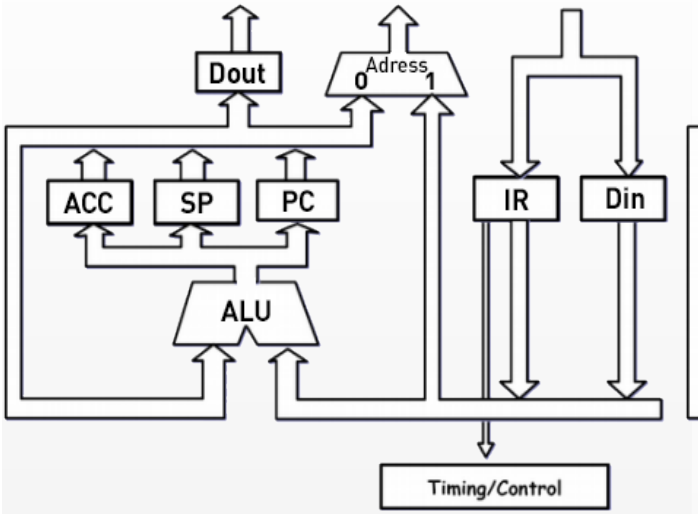

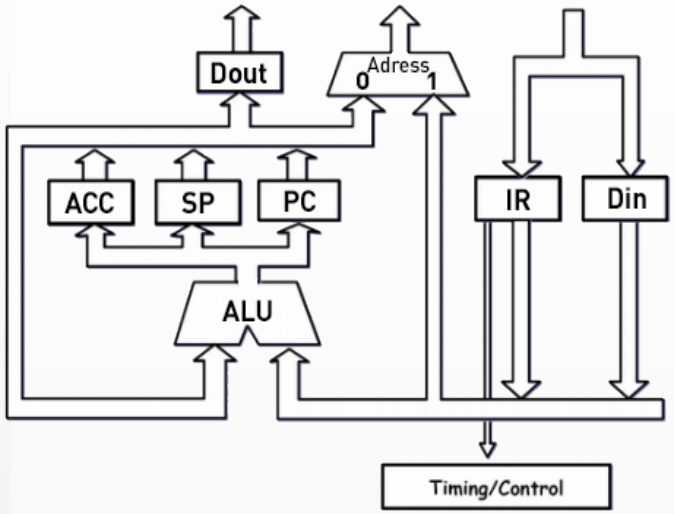

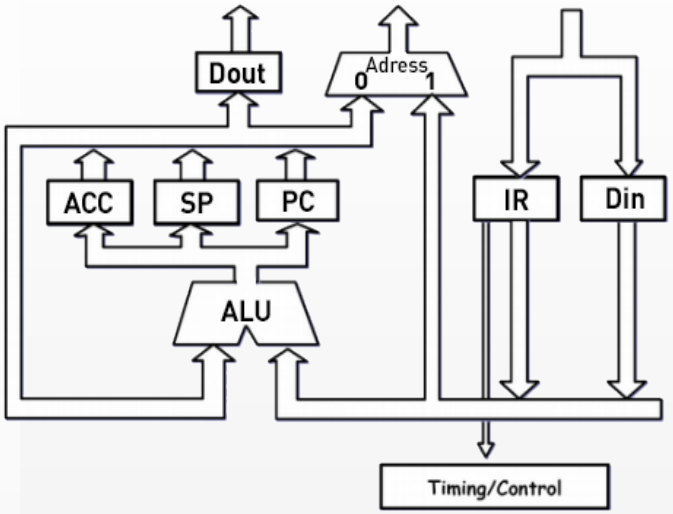

Inputs						Outputs																	Description / Effect
																				Memory			
Instruction	Opcode	$\overline{\text{Reset}}$	Step	ACCz / Zero	ACC15 / Neg	Step	ACC		SP		PC		IR		DIN		DOUT		ALU	Adress	MEMrq	R/nW	$S = IR_{0...11}$
							oe	ie	oe	ie	oe	ie	oe	ie	oe	ie	oe	ie					
		1	0	x	x	1	0	0	0	0	1	1	0	1	0	0	0	0	A+1	0	1	1	IR=[PC], PC = PC + 1

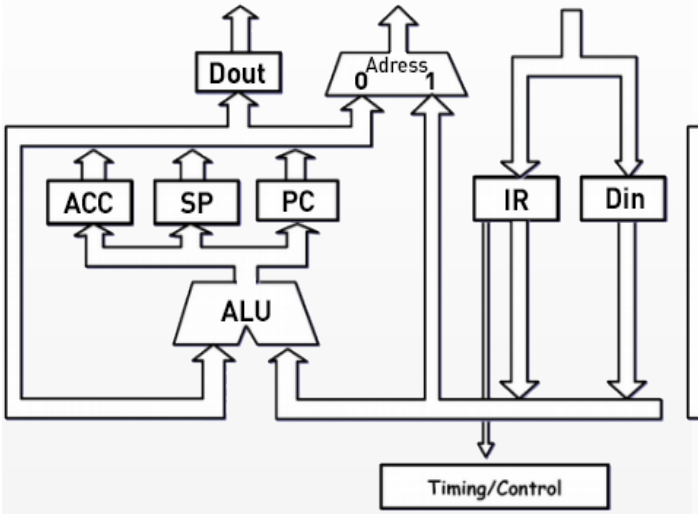

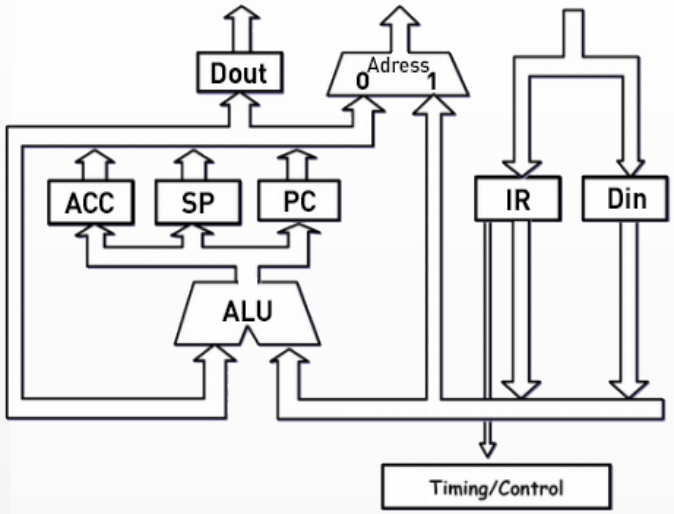

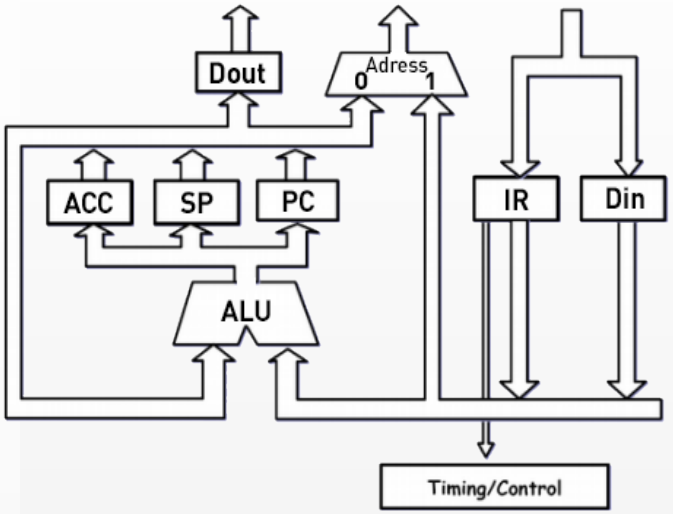

Inputs						Outputs																	Description / Effect
																				Memory			
Instruction	Opcode	$\overline{\text{Reset}}$	Step	ACCz / Zero	ACC15 / Neg	Step	ACC		SP		PC		IR		DIN		DOUT		ALU	Adress	MEMrq	R/nW	$S = IR_{0...11}$
							oe	ie	oe	ie	oe	ie	oe	ie	oe	ie	oe	ie					
		1	0	x	x	1	0	0	0	0	1	1	0	1	0	0	0	0	A+1	0	1	1	IR=[PC], PC = PC + 1

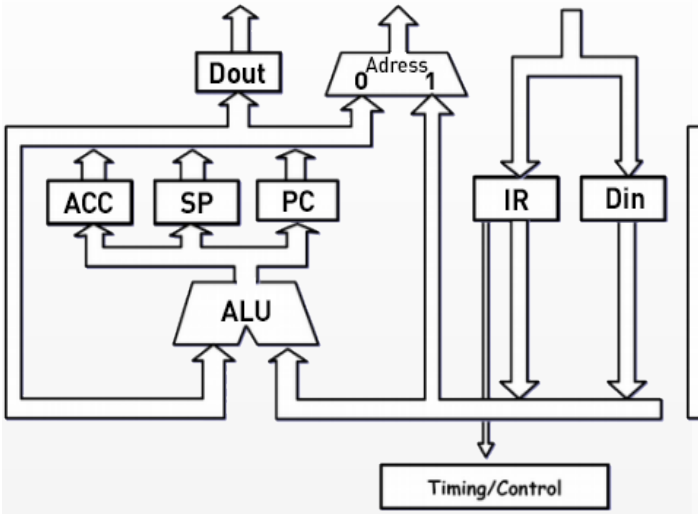

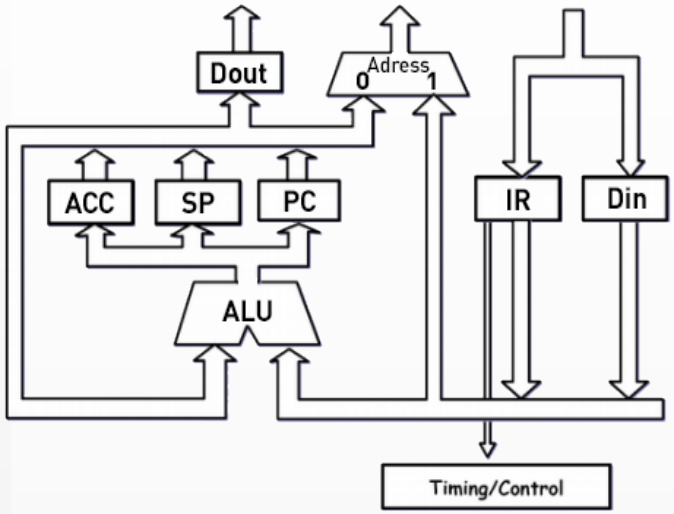

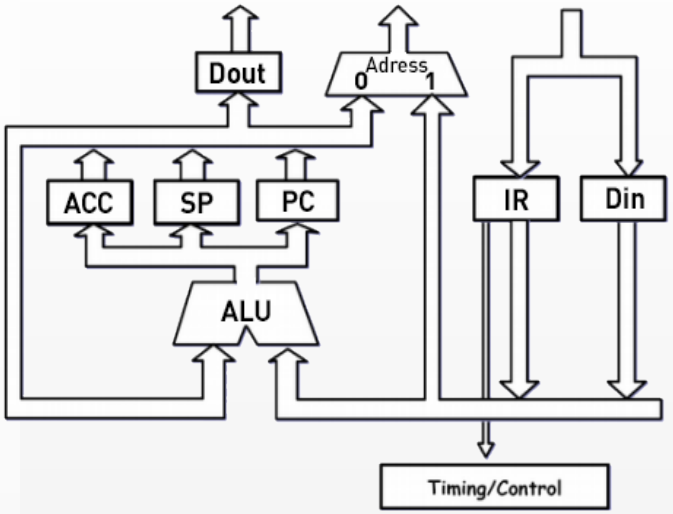

Inputs						Outputs																	Description / Effect
																				Memory			
Instruction	Opcode	$\overline{\text{Reset}}$	Step	ACCz / Zero	ACC15 / Neg	Step	ACC		SP		PC		IR		DIN		DOUT		ALU	Adress	MEMrq	R/nW	$S = IR_{0...11}$
							oe	ie	oe	ie	oe	ie	oe	ie	oe	ie	oe	ie					
		1	0	x	x	1	0	0	0	0	1	1	0	1	0	0	0	0	A+1	0	1	1	IR=[PC], PC = PC + 1

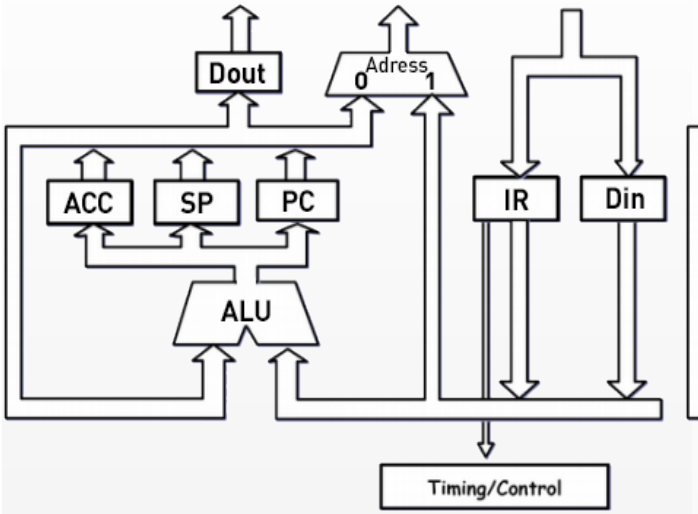

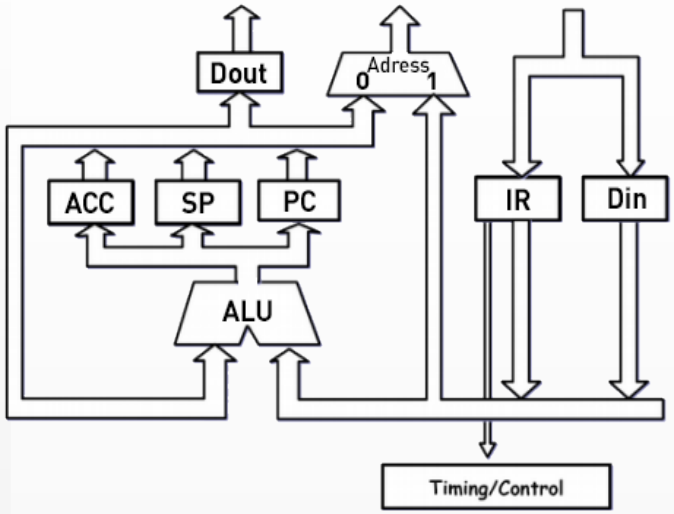

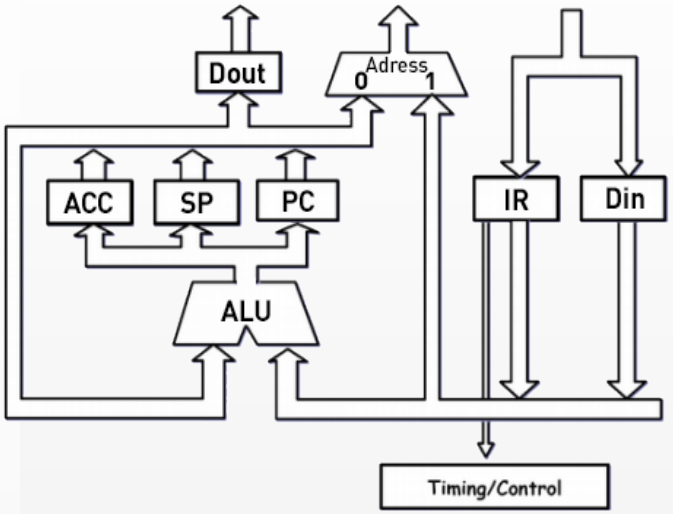

Inputs						Outputs																	Description / Effect
																				Memory			
Instruction	Opcode	$\overline{\text{Reset}}$	Step	ACCz / Zero	ACC15 / Neg	Step	ACC		SP		PC		IR		DIN		DOUT		ALU	Adress	MEMrq	R/nW	$S = IR_{0...11}$
							oe	ie	oe	ie	oe	ie	oe	ie	oe	ie	oe	ie					
		1	0	x	x	1	0	0	0	0	1	1	0	1	0	0	0	0	A+1	0	1	1	IR=[PC], PC = PC + 1