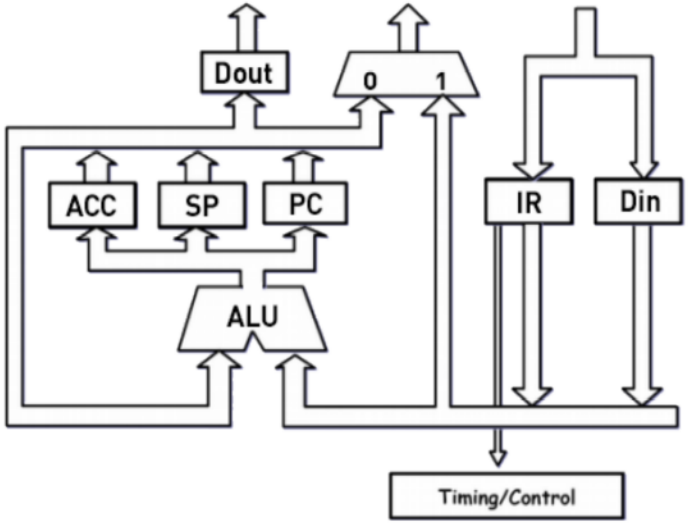

Inputs						Outputs																	Description
Instruction	Opcode	$\overline{\text{Reset}}$	step	ACC_z	ACC_{15}	step	Adress	ACC_{oe}	ACC_{ie}	SP_{oe}	Sp_{ie}	PC_{oe}	PC_{ie}	IR_{oe}	IR_{ie}	DIN_{oe}	DIN_{ie}	$DOUT_{oe}$	$DOUT_{ie}$	ALU Funct	MEM_{rq}	RnW	

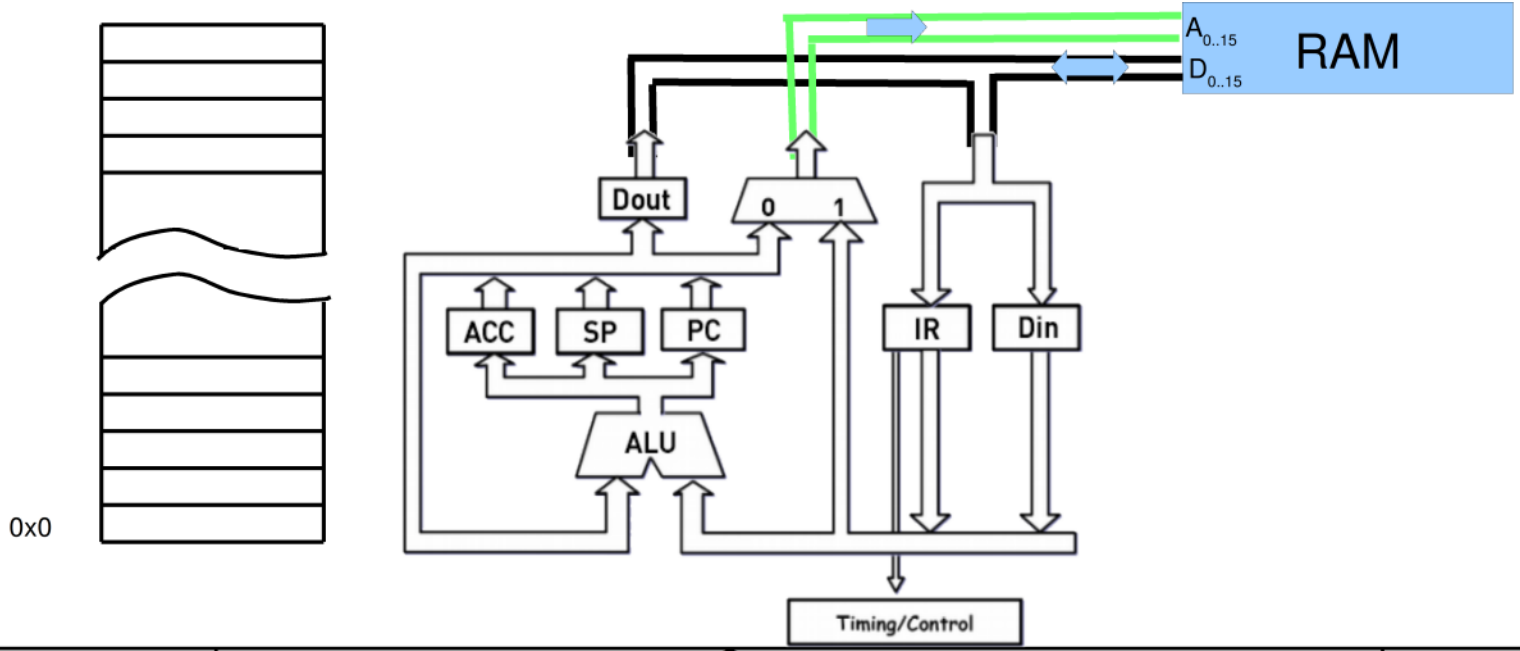

Inputs						Outputs																	Description
Instruction	Opcode	$\overline{\text{Reset}}$	step	ACC_z	ACC_{15}	step	Adress	ACC_{oe}	ACC_{ie}	SP_{oe}	Sp_{ie}	PC_{oe}	PC_{ie}	IR_{oe}	IR_{ie}	DIN_{oe}	DIN_{ie}	$DOUT_{oe}$	$DOUT_{ie}$	ALU Funct	MEM_{rq}	RnW	

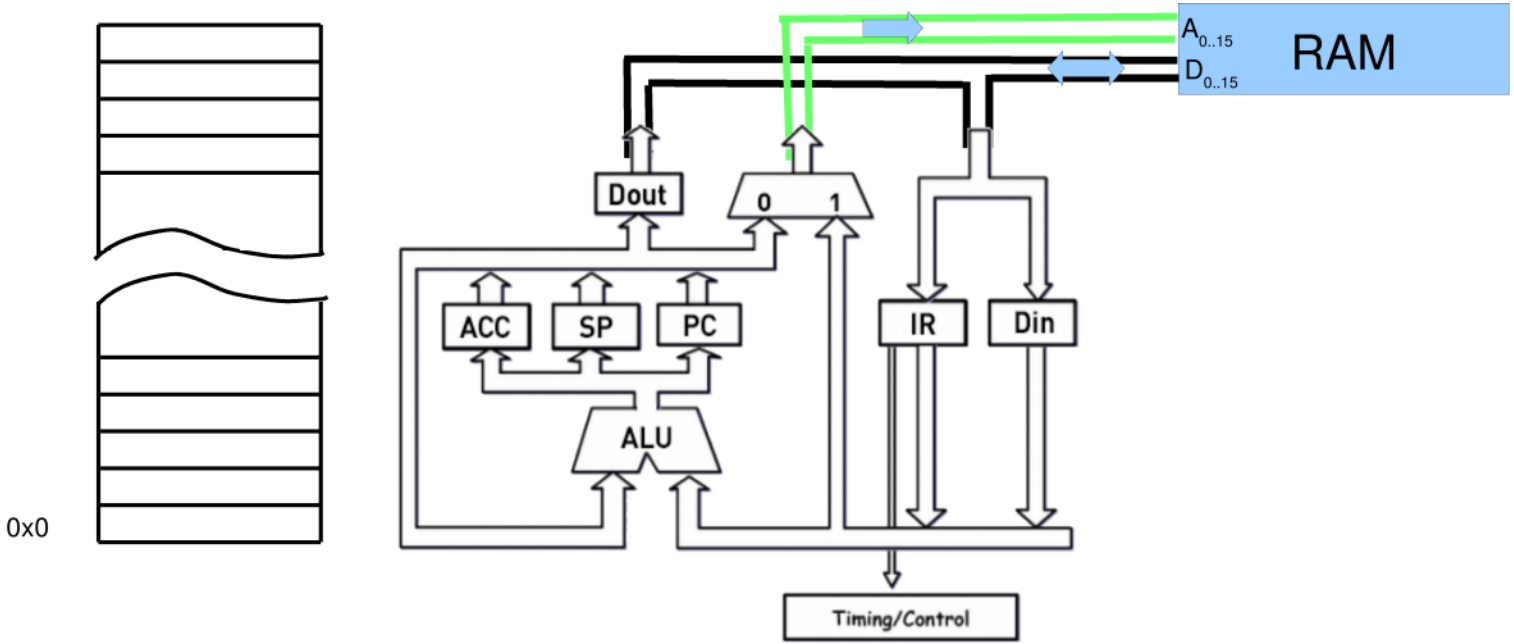

Inputs						Outputs																	Description
Instruction	Opcode	$\overline{\text{Reset}}$	step	ACC_z	ACC_{15}	step	Adress	ACC_{oe}	ACC_{ie}	SP_{oe}	Sp_{ie}	PC_{oe}	PC_{ie}	IR_{oe}	IR_{ie}	DIN_{oe}	DIN_{ie}	$DOUT_{oe}$	$DOUT_{ie}$	ALU Funct	MEM_{rq}	RnW	
		1	0	X	X	1	0	0	0	0	0	1	1	0	1	0	0	0	0	A+1	1	1	IR = [PC]; PC = PC + 1

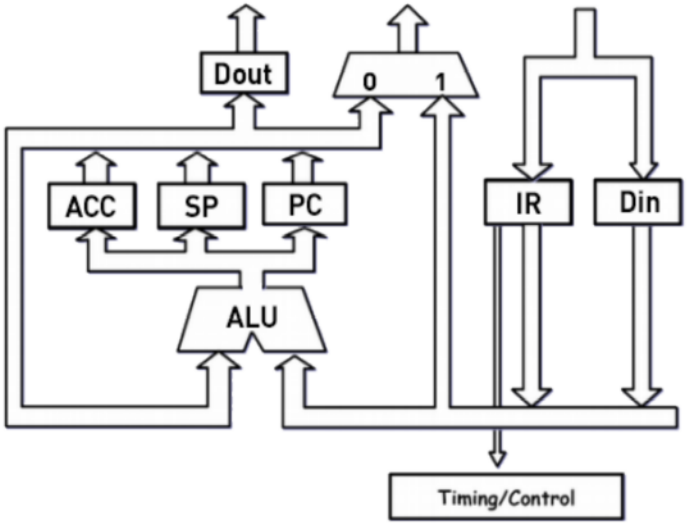

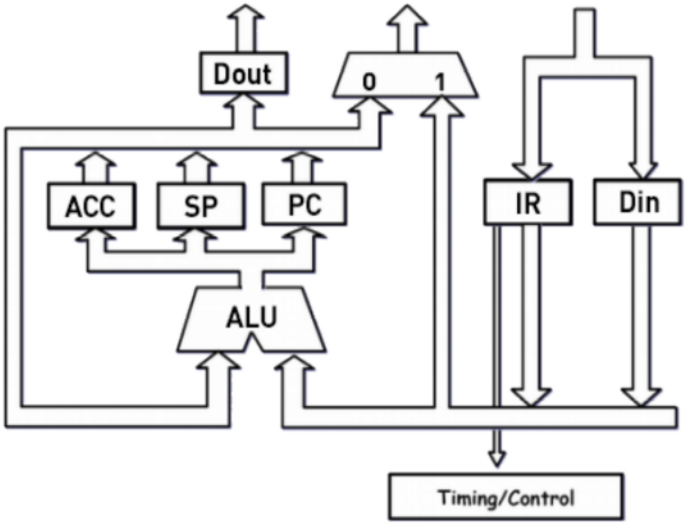

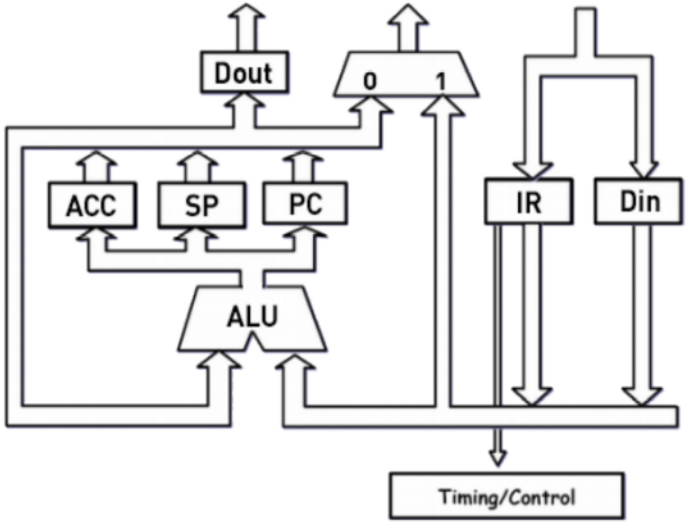

Inputs						Outputs																	Description
Instruction	Opcode	$\overline{\text{Reset}}$	step	ACC_z	ACC_{15}	step	Adress	ACC_{oe}	ACC_{ie}	SP_{oe}	Sp_{ie}	PC_{oe}	PC_{ie}	IR_{oe}	IR_{ie}	DIN_{oe}	DIN_{ie}	$DOUT_{oe}$	$DOUT_{ie}$	ALU Funct	MEM_{rq}	RnW	
		1	0	X	X	1	0	0	0	0	0	1	1	0	1	0	0	0	0	A+1	1	1	IR = [PC]; PC = PC + 1

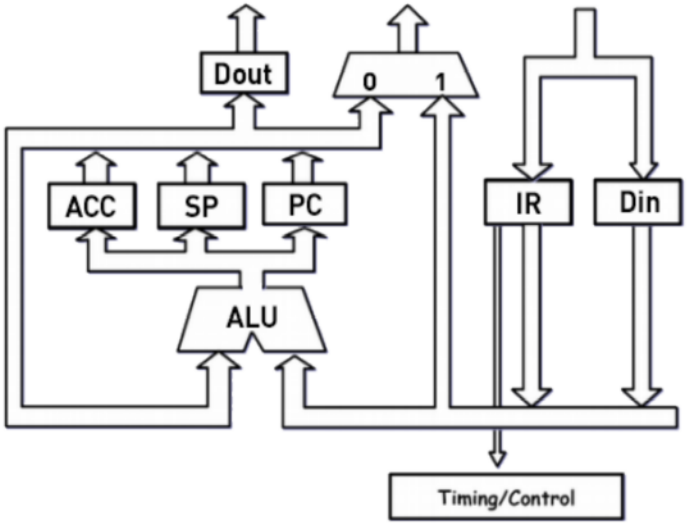

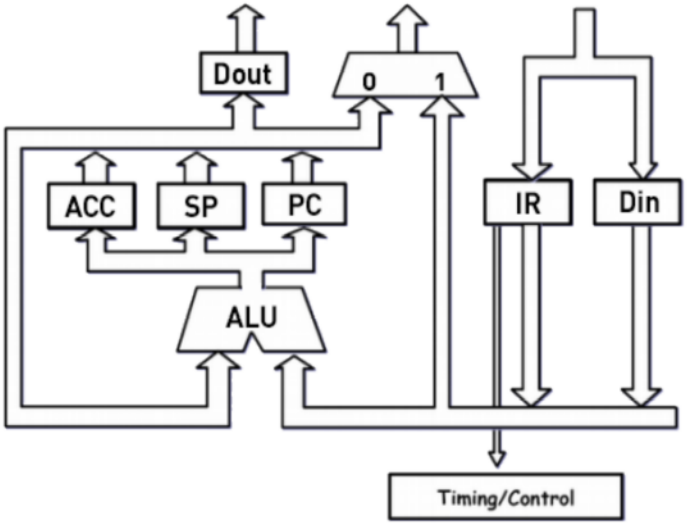

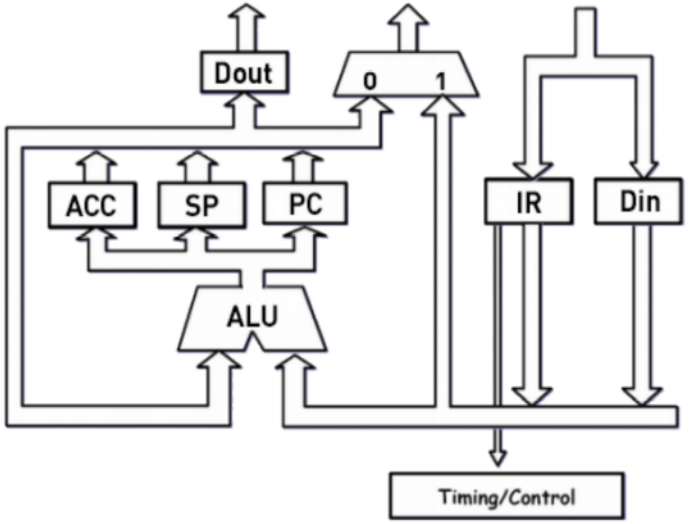

Inputs						Outputs																	Description
Instruction	Opcode	$\overline{\text{Reset}}$	step	ACC_z	ACC_{15}	step	Adress	ACC_{oe}	ACC_{ie}	SP_{oe}	Sp_{ie}	PC_{oe}	PC_{ie}	IR_{oe}	IR_{ie}	DIN_{oe}	DIN_{ie}	$DOUT_{oe}$	$DOUT_{ie}$	ALU Funct	MEM_{rq}	RnW	
		1	0	X	X	1	0	0	0	0	0	1	1	0	1	0	0	0	0	A+1	1	1	IR = [PC]; PC = PC + 1

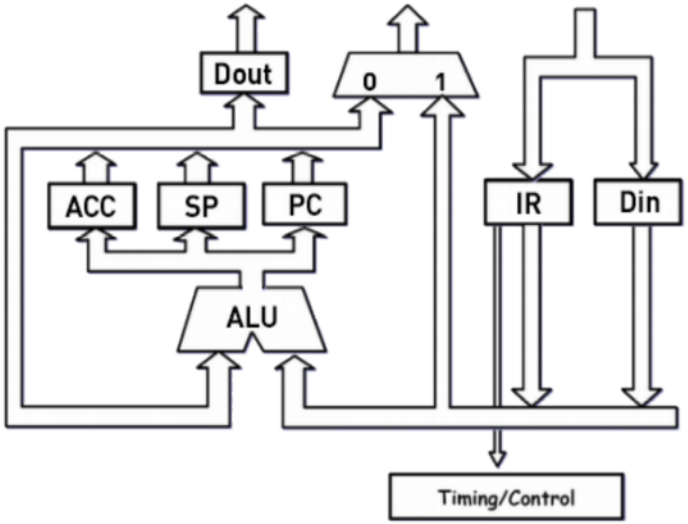

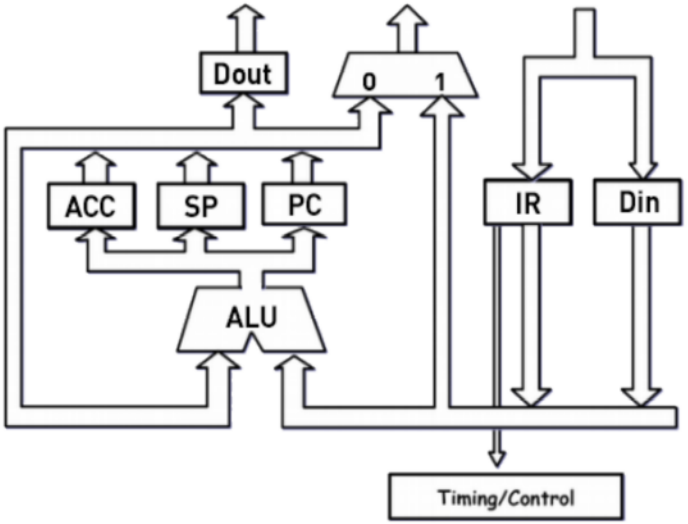

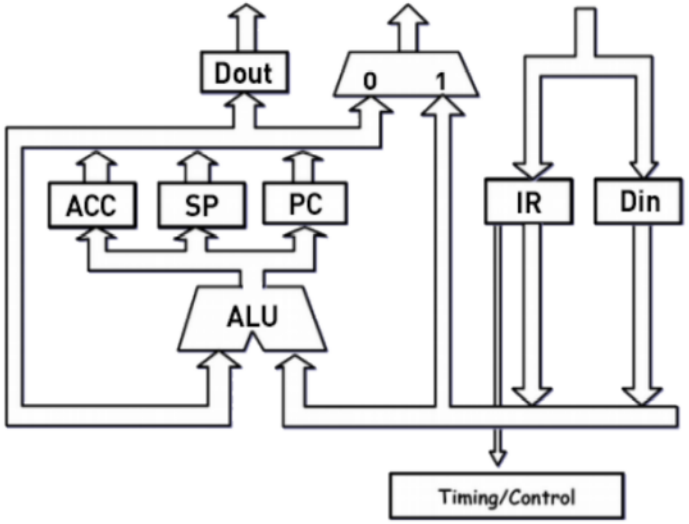

Inputs						Outputs																	Description
Instruction	Opcode	$\overline{\text{Reset}}$	step	ACC_z	ACC_{15}	step	Adress	ACC_{oe}	ACC_{ie}	SP_{oe}	Sp_{ie}	PC_{oe}	PC_{ie}	IR_{oe}	IR_{ie}	DIN_{oe}	DIN_{ie}	$DOUT_{oe}$	$DOUT_{ie}$	ALU Funct	MEM_{rq}	RnW	
		1	0	X	X	1	0	0	0	0	0	1	1	0	1	0	0	0	0	A+1	1	1	IR = [PC]; PC = PC + 1

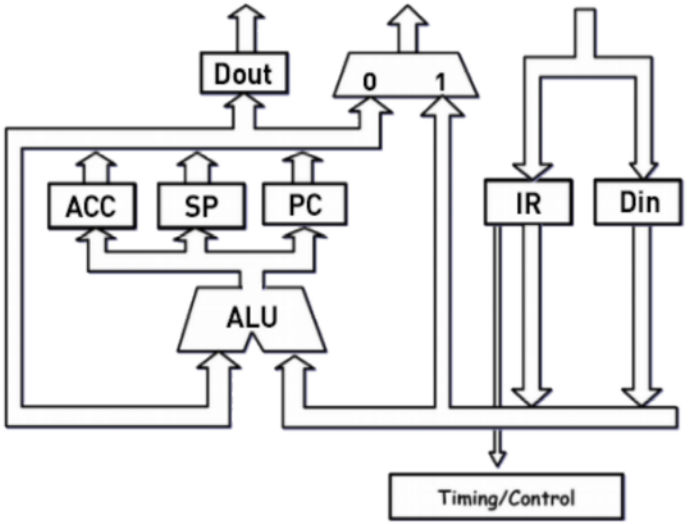

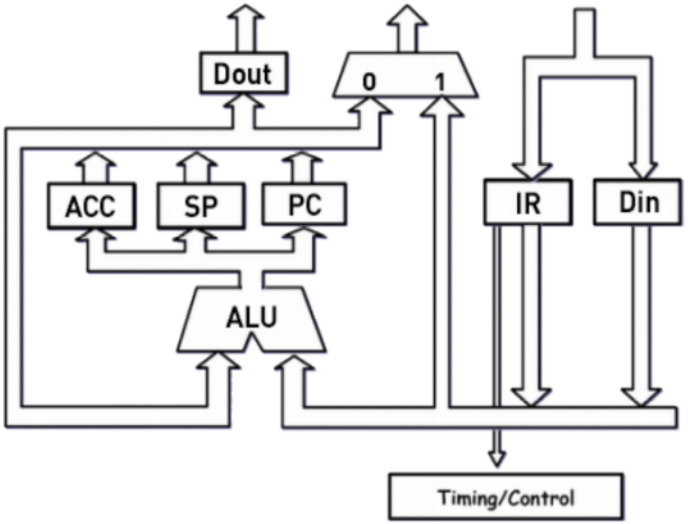

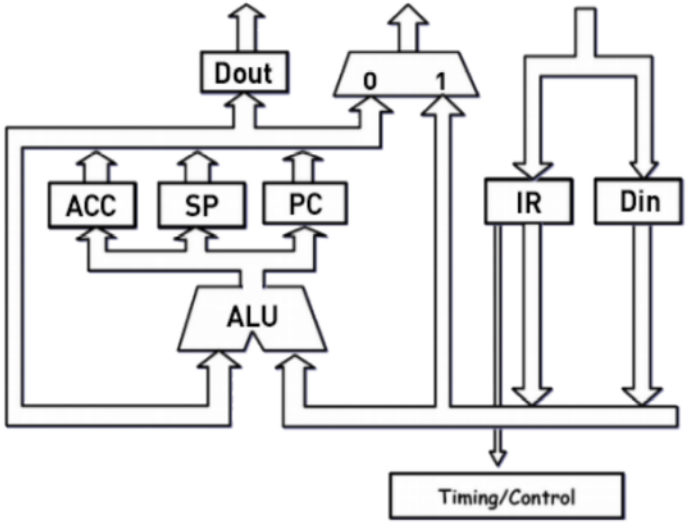

Inputs						Outputs																	Description
Instruction	Opcode	$\overline{\text{Reset}}$	step	ACC_z	ACC_{15}	step	Adress	ACC_{oe}	ACC_{ie}	SP_{oe}	Sp_{ie}	PC_{oe}	PC_{ie}	IR_{oe}	IR_{ie}	DIN_{oe}	DIN_{ie}	$DOUT_{oe}$	$DOUT_{ie}$	ALU Funct	MEM_{rq}	RnW	
		1	0	X	X	1	0	0	0	0	0	1	1	0	1	0	0	0	0	A+1	1	1	IR = [PC]; PC = PC + 1

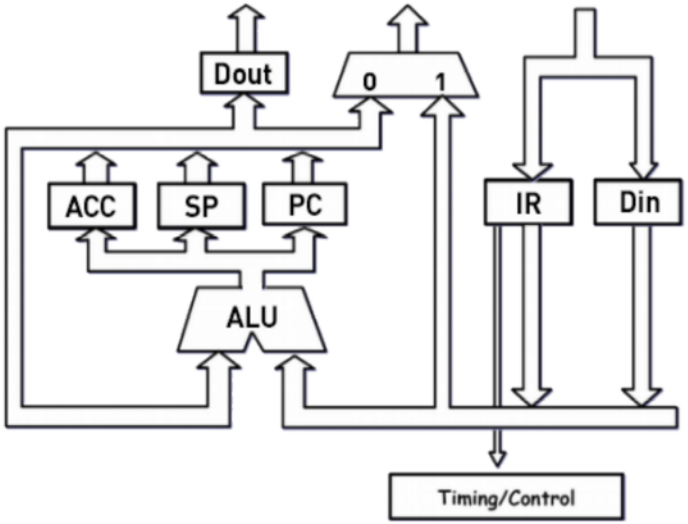

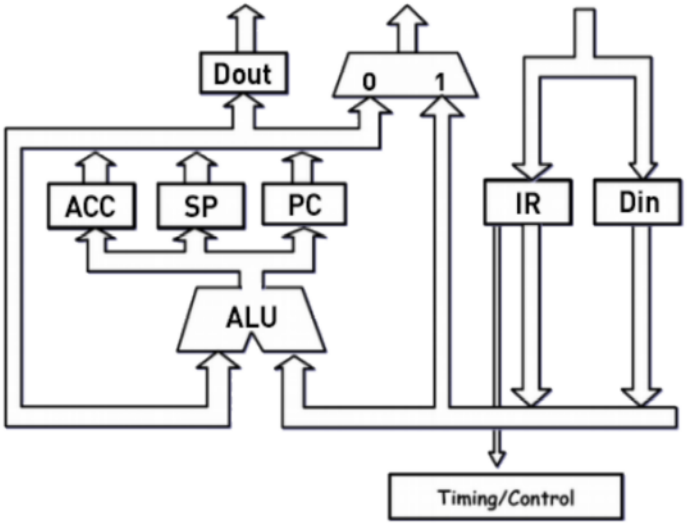

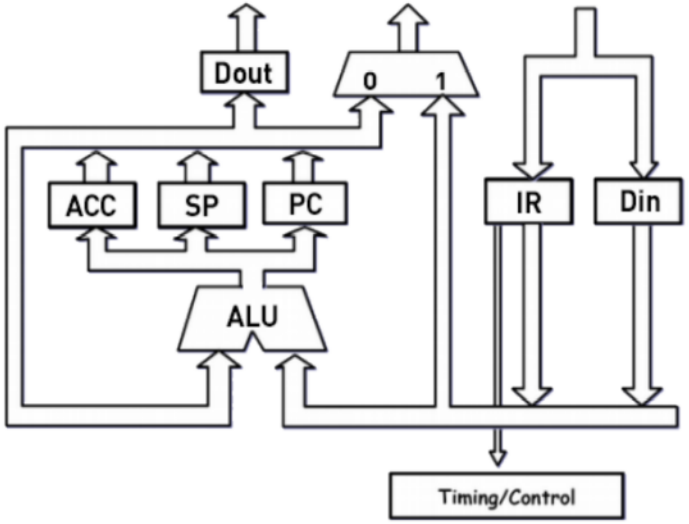

Inputs						Outputs																	Description
Instruction	Opcode	$\overline{\text{Reset}}$	step	ACC_z	ACC_{15}	step	Adress	ACC_{oe}	ACC_{ie}	SP_{oe}	Sp_{ie}	PC_{oe}	PC_{ie}	IR_{oe}	IR_{ie}	DIN_{oe}	DIN_{ie}	$DOUT_{oe}$	$DOUT_{ie}$	ALU Funct	MEM_{rq}	RnW	
		1	0	X	X	1	0	0	0	0	0	1	1	0	1	0	0	0	0	A+1	1	1	IR = [PC]; PC = PC + 1